SPARE PARTS LIST

MODEL NO. MT815

ITEM	PART NO.	DESCRIPTION	QTY	NOTE
001	192692-0	KEYLESS DRILL CHUCK	1	
002	417822-5	GRIP BASE	1	
003	153503-4	GRIP 36 COMPLETE	1	
004	265495-6	HEX. BOLT M8X110	1	
006	266361-0	TAPPING SCREW 4X30	3	
007	451907-7	GEAR HOUSING	1	
008	324223-9	SPINDLE	1	
009	233330-6	COMPRESSION SPRING 16	1	
010	211241-5	BALL BEARING 6202DDW	1	
011	257246-1	RING 19	1	
012	962153-2	RETAINING RING R-35	1	
013	257173-2	RING 12	1	
014	226589-2	HELICAL GEAR 37	1	
015	233938-6	RING SPRING 12	1	
016	216001-0	STEEL BALL 3.5	1	
017	256251-5	PIN 4	1	
018	424112-9	SEAL RING	1	
019	140426-5	GEAR HOUSING COVER COMPLETE	1	
020	417819-4	CHANGE LEVER	1	
021	451908-5	LEVER CASE	1	
022	345944-0	CHANGE PLATE	1	
023	211031-6	BALL BEARING 608LLB	1	
024	241869-5	FAN 55	1	
025	510163-9	ARMATURE ASSEMBLY 220V INC. 23,24,26,27	1	
026	681636-0	INSULATION WASHER	1	
027	210062-2	BALL BEARING 607ZZ	1	
028	421808-3	RUBBER RING 19	1	
029	450620-4	BAFFLE PLATE	1	
030	266415-3	TAPPING SCREW 4X55	2	
031	344871-8	RETAINER	2	
032	417237-6	INSULATION COVER	2	
033	626603-8	FIELD 220V	1	
034	451905-1	MOTOR HOUSING	1	
035	868133-5	MT815 NAME PLATE	1	
036	140427-3	HANDLE COVER COMPLETE	1	
037	266326-2	TAPPING SCREW 4X18	4	
038	643563-9	BRUSH HOLDER 5X8	2	
039	B-80282	CARBON BRUSH SET CB-85A	1	
041	650586-0	SWITCH DGQ-1104H	1	
042	266326-2	TAPPING SCREW 4X18	2	
043	687124-5	STRAIN RELIEF	1	
044	682569-2	CORD GUARD 8-85	1	
045	691284-7	POWER SUPPLY CORD 0.75-2-2.0	1	
046	345280-4	HEX. WASHER	1	
A01	321144-6	DEPTH GAUGE	1	

SERVICE DRAWING
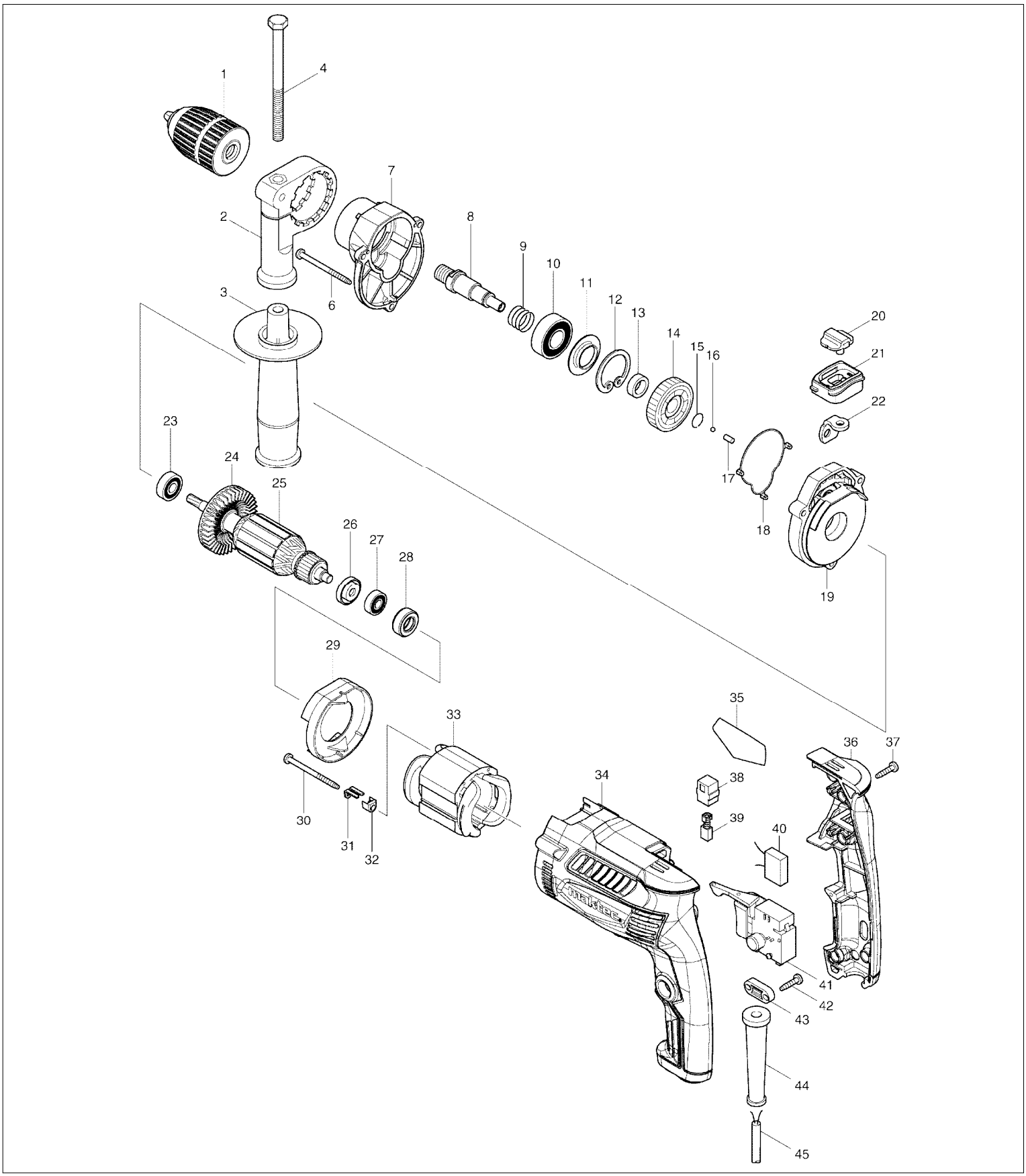
MODEL NO. MT815